Researchers build quantum sensors based on single solid-state spins

December 2 2015, by Bob Yirka

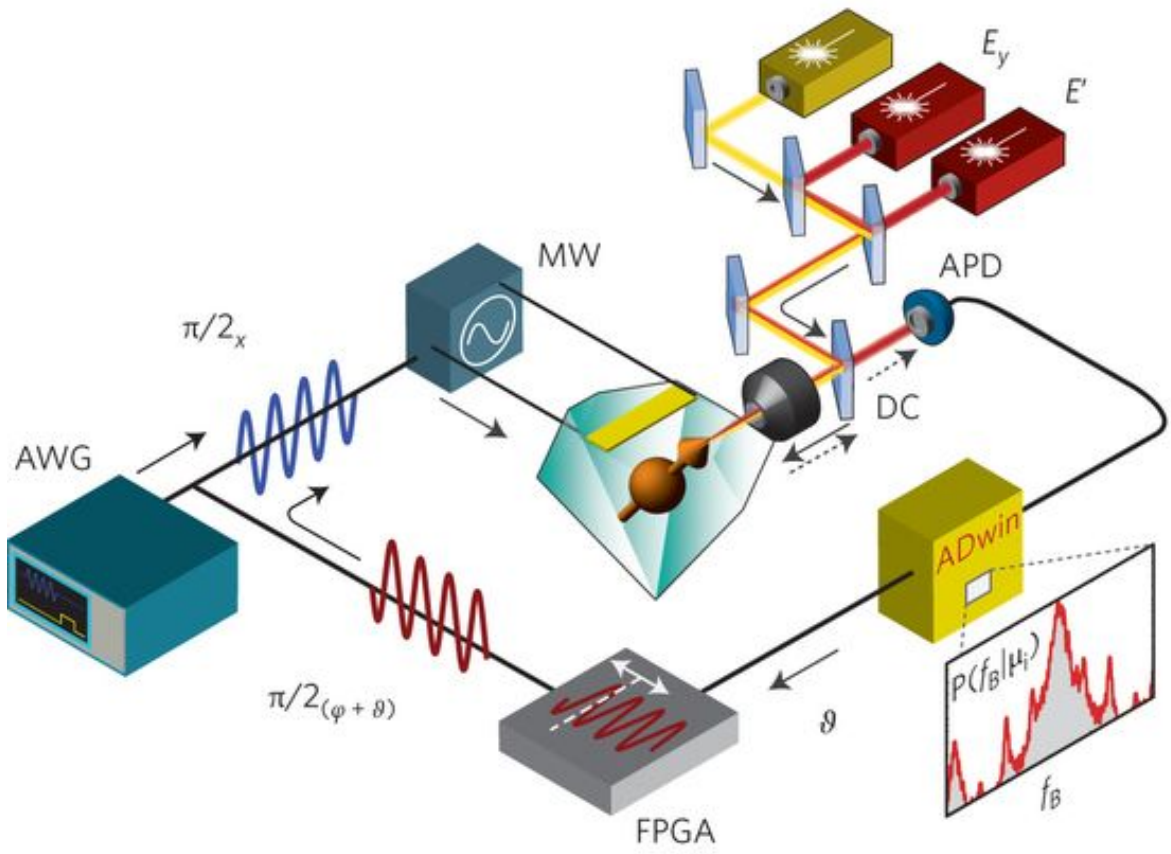

Experiment apparatus. Credit: (c) 2015 *Nature Nanotechnology* (2015) doi:10.1038/nnano.2015.261

(Phys.org)—A team of researchers with members from the Netherlands,

Australia, and the U.K. has developed a new way to build an extremely sensitive magnetic sensor. As they describe in their paper published in the journal *Nature Nanotechnology*, their sensors are based on sensing with a single electron spin using real-time adaptive measurements.

The work by the team marks the development of the first quantum sensor to be based on the spin of a single electron, which in this case, was trapped in a diamond nitrogen-vacancy center. It is so sensitive that it is able to measure the strength of a magnetic field to the very limits of that described by quantum physics.

The problem with attempting to use the spin of an electron as a sensor, of course, is that it must be measured, which causes the quantum state to be affected. To get around this problem the researchers used an atomic sized defect in diamond kept in an extremely cold environment—the spin in its defect (nitrogen-vacancy) is not very sensitive to environmental noise because it has no net nuclear spin. The sensor works by taking multiple measurements as the electron is exposed to the magnetic field, on the spin defect, using optimal settings based on prior measurements and then adjusting those that come after using Bayesian statistics—it is based on Zeeman interactions, the researches explain—which is what happens when an electron moves into an magnetic field. The actual measurements are taken by subjecting the spin to microwave radiation, then exciting it with a laser and then measuring the fluorescent signals that are produced. The data is then processed (on an off-the-shelf microprocessor they programmed for their purposes) and the results are used to set the settings for the next measurement, and so on.

The result is a sensor that is 100 times more precise than previous sensors, though the team acknowledges that to make it useful, they will have to find a way to make it usable at room temperature. If they can do that, the sensor could conceivably be used to image the makeup of

individual molecules, or perhaps as a method for storing qubits in a quantum computer.

More information: C. Bonato et al. Optimized quantum sensing with a single electron spin using real-time adaptive measurements, *Nature Nanotechnology* (2015). DOI: 10.1038/nnano.2015.261

Abstract
Quantum sensors based on single solid-state spins promise a unique combination of sensitivity and spatial resolution. The key challenge in sensing is to achieve minimum estimation uncertainty within a given time and with high dynamic range. Adaptive strategies have been proposed to achieve optimal performance, but their implementation in solid-state systems has been hindered by the demanding experimental requirements. Here, we realize adaptive d.c. sensing by combining single-shot readout of an electron spin in diamond with fast feedback. By adapting the spin readout basis in real time based on previous outcomes, we demonstrate a sensitivity in Ramsey interferometry surpassing the standard measurement limit. Furthermore, we find by simulations and experiments that adaptive protocols offer a distinctive advantage over the best known non-adaptive protocols when overhead and limited estimation time are taken into account. Using an optimized adaptive protocol we achieve a magnetic field sensitivity of 6.1 ± 1.7 nT $Hz^{-1/2}$ over a wide range of 1.78 mT. These results open up a new class of experiments for solid-state sensors in which real-time knowledge of the measurement history is exploited to obtain optimal performance.