Monitoring material changes in the hostile environment of a fusion reactor

November 13 2013

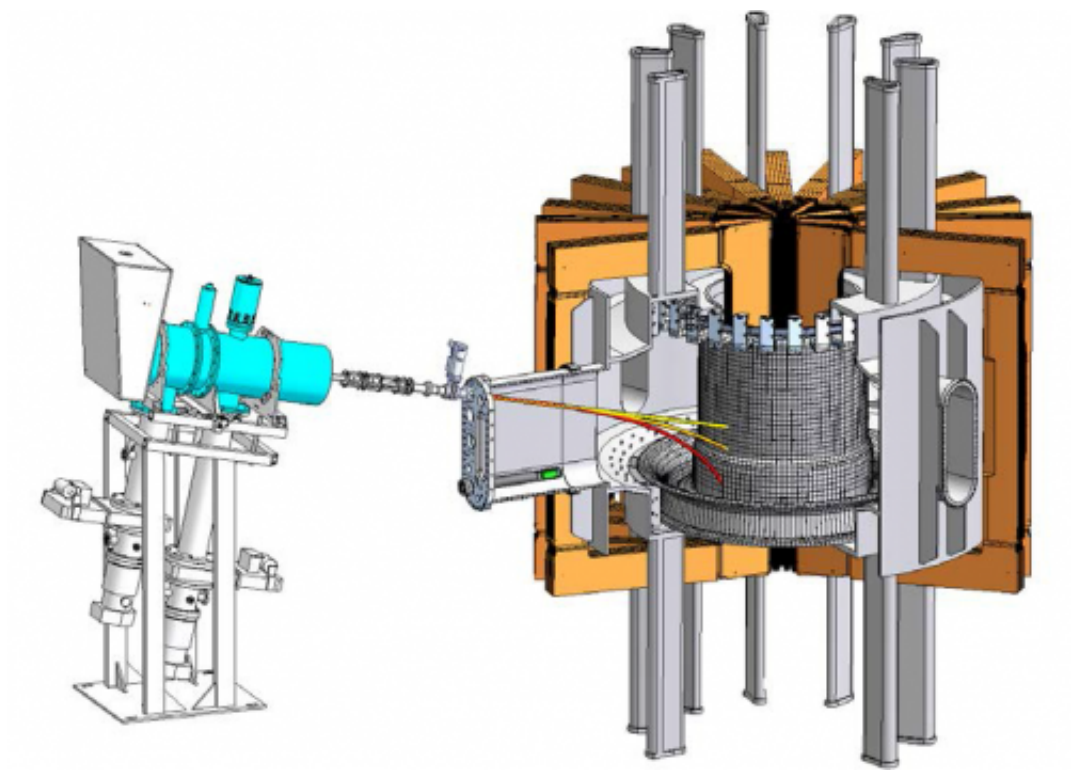

A small linear accelerator (left; cyan colored) injects a beam of energetic ions into the Alcator C-Mod tokamak (right). The ions are magnetically steered with tokamak magnets (copper colored) to different locations (yellow, orange, and red colored) on the wall. Analyzing the nuclear reaction products with small detectors (green colored) induced by the beam provides crucial information about the materials inside the device. Credit: Zach Hartwig

Materials are widely recognized as one of the critical remaining

challenges for making fusion a commercially viable energy source. In a future fusion power plant, the materials surrounding and interacting with the plasma must survive in an extremely hostile environment for up to two years to produce electricity reliably, safely and economically.

Now, researchers at MIT's Plasma Science and Fusion Center have demonstrated for the first time a novel diagnostic instrument that can remotely map the composition of material surfaces inside a magnetic fusion device. The measurements can be performed in between successive plasma experiments so researchers can study the evolution of materials over time. This new approach to the study of fusion materials promises to provide scientists with new insights into the dynamic interaction of fusing plasma and its surrounding materials.

The challenges to materials from plasma interactions are severe: the erosion of surface material, the mixing of materials to form unintended alloys, and the retention of the plasma fuel. These processes fundamentally modify the properties for which the materials were originally selected, resulting in shortened component lifetime and degraded plasma performance. The dynamic, spatially varying changes to the material surfaces, coupled with the hostile environment inside the magnetic fusion device, present substantial challenges for experimental study in present-day devices.

To date, the leading experimental approach has been to remove the materials for study to an offsite, dedicated facility, where the materials are analyzed with high-energy particle beams using a technique known as ion beam analysis (IBA). While providing precise measurements of the material composition and structure, IBA is resource intensive for the fusion facility, requiring time consuming manned access while only providing a "snapshot" of the material removed at a single moment in time.

The MIT research team led by Professor Dennis Whyte and graduate students Harold Barnard, Zach Hartwig and Brandon Sorbom has, for the first time, performed IBA within a magnetic fusion device. The technique employs a small linear accelerator to inject a beam of charged particles (or ions) into the Alcator C-Mod tokamak between plasma discharges. Because the beam is composed of ions, magnets normally used to confine plasma can be used to steer the beam to different material surfaces. Advanced particle detectors located nearby detect the induced neutron and gamma particles, which can be used to compute the composition of the material surfaces.

The first experimental results from the diagnostic will be presented at the American Physical Society Division of Plasma Physics meeting in Denver in November. Researchers were able to track changes of deuterium, the heavy form of hydrogen fusion fuel, and boron, a protective metallic film that coats the materials, at four different surface locations in response to plasma operation. The measured changes of boron erosion and deposition were in agreement with previous studies, demonstrating that the technique is suitable for studying the dynamic link between plasma conditions and the material response without requiring access to the interior of the device. The ultimate goal of the diagnostic is to routinely measure large fractions of the interior surface in between each plasma discharge, enabling a global understanding of material behavior in fusion systems and providing crucial experimental data for computational models of plasmamaterial interactions.

The diagnostic design makes it possible to incorporate into existing fusion facilities with minimal modifications to the fusion device itself. This could allow widespread adoption of such instrumentation as the "standard" materials diagnostic for magnetic fusion devices. Perhaps more importantly, the MIT team has demonstrated that IBA of materials can be performed in extremely unfavorable environments outside of dedicated facilities.

The technique could be deployed to monitor materials in situations where traditional instrumentation does not work or cannot survive, such as in hazardous nuclear or highvacuum environments.

More information: Abstract: NI3.00003 The in-situ diagnosis of plasma-wall interactions on magnetic fusion devices with accelerators, Session NI3: Technology and Fundamental Plasma Physics
9:30 AM-12:30 PM, Wednesday, November 13, 2013 Room: Plaza F

Provided by American Physical Society