Novel spectrometer developed for high-resolution laser heterodyne spectroscopy

September 20 2022, by Zhang Nannan

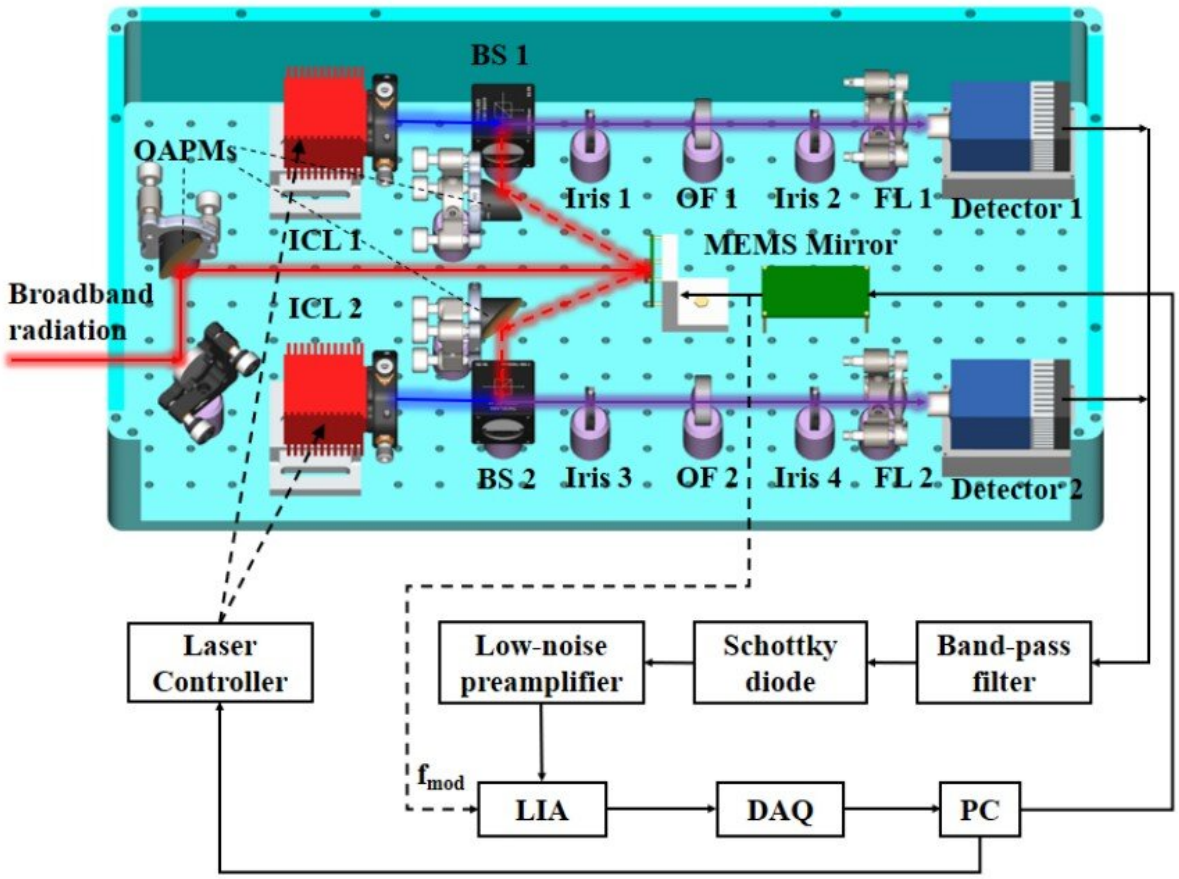

Schematic diagram of the experimental setup. Credit: Xue Zhenyue

A research team led by Prof. Gao Xiaoming from the Hefei Institutes of Physical Science of the Chinese Academy of Sciences has developed a

new spectrometer capable of remotely sensing atmospheric methane (CH_4), water vapor (H_2O) and nitrous oxide (N_2O) simultaneously.

Relevant results were published in *Optics Express*.

In the mid-infrared band, due to the lack of mature optical fiber components or optical waveguides, traditional mechanical choppers are usually used to modulate sunlight, and it's difficult to miniaturize the system.

In order to solve this problem, scientists developed this novel spectrometer. It was called modulator-based dual-channel mid-infrared laser heterodyne radiometer (MIR-LHR), and was based on a micro-electro-mechanical system (MEMS) modulator.

The scientists replaced the traditional mechanical chopper with the MEMS modulator. "This makes the system more stable and compact," said Xue Zhengyue, first author of the study.

They also combined two inter-band cascaded lasers, which enabled the developed heterodyne spectrometer to measure volume mixing ratio of CH_4, H_2O, and N_2O simultaneously.

Through inversion calculations, they obtained the laser heterodyne spectra of the Hefei area. According to the experiment results, the measured volume mixing ratios of CH_4, H_2O, and N_2O were in good agreement with the simulated spectra of atmospheric transmission modeling.

The MIR-LHR based on MEMS modulator has prosperous application prospects. "This study lays a foundation for further development of portable high-spectral resolution laser heterodyne spectroscopy instruments for atmospheric multi-component gas remote sensing," said

associate Prof. Tan Tu.

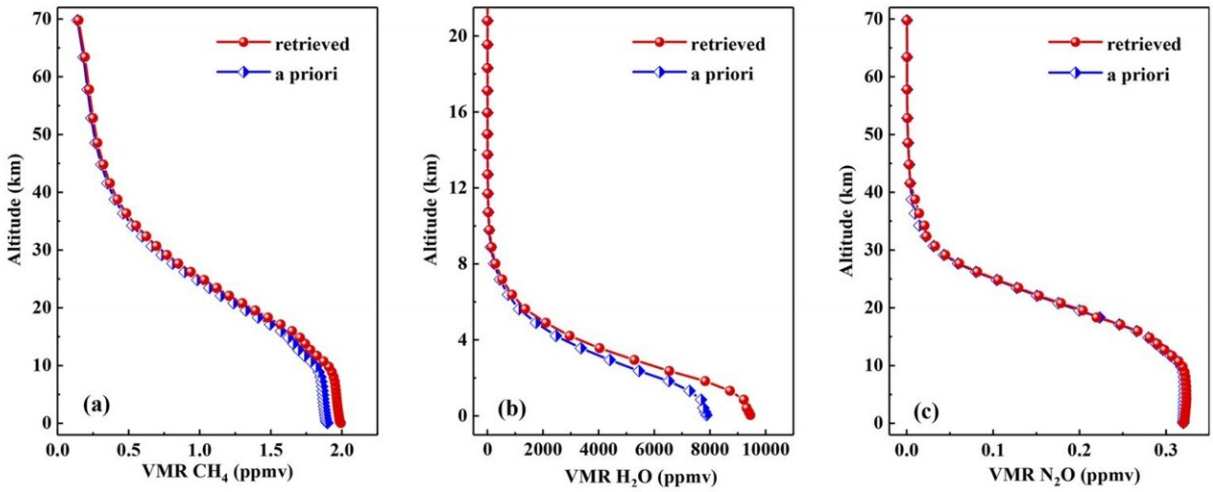

The retrieved vertical concentration profiles of (a) CH_4, (b) water vapor and (c) N_2O. Credit: Xue Zhenyue

More information: Zhengyue Xue et al, A MEMS modulator-based dual-channel mid-infrared laser heterodyne radiometer for simultaneous remote sensing of atmospheric CH4, H2O and N2O, *Optics Express* (2022). DOI: 10.1364/OE.469271

Provided by Chinese Academy of Sciences